3.9 Wiring of Three Control Modes
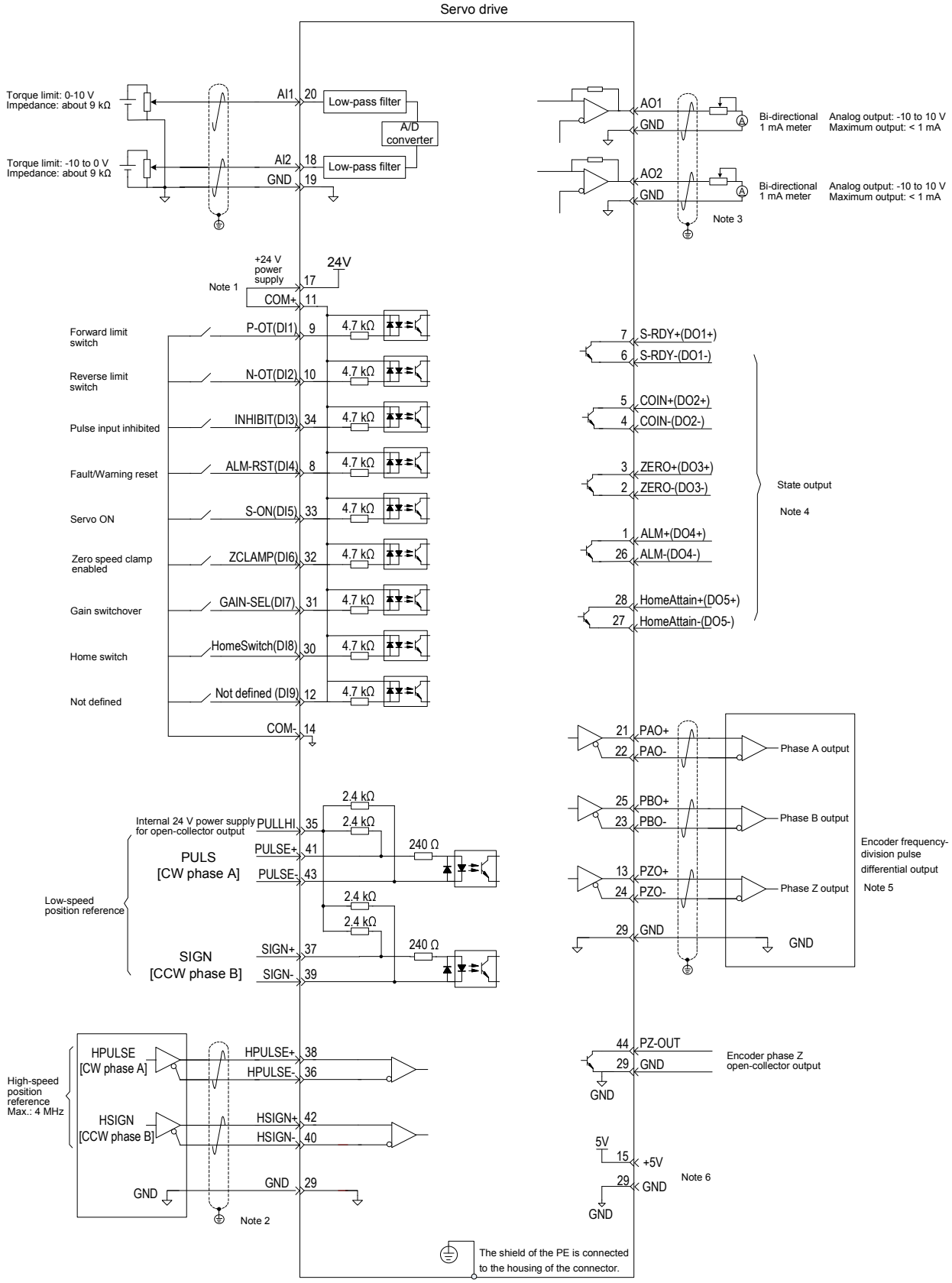
Figure 3-36 Wiring of the position control mode